# *Homemade* WOOD LATHE *mounted on floor stand*

**Self-contained unit has four-speed V-belt drive, rigid iron bed, and a quick-acting tailstock**

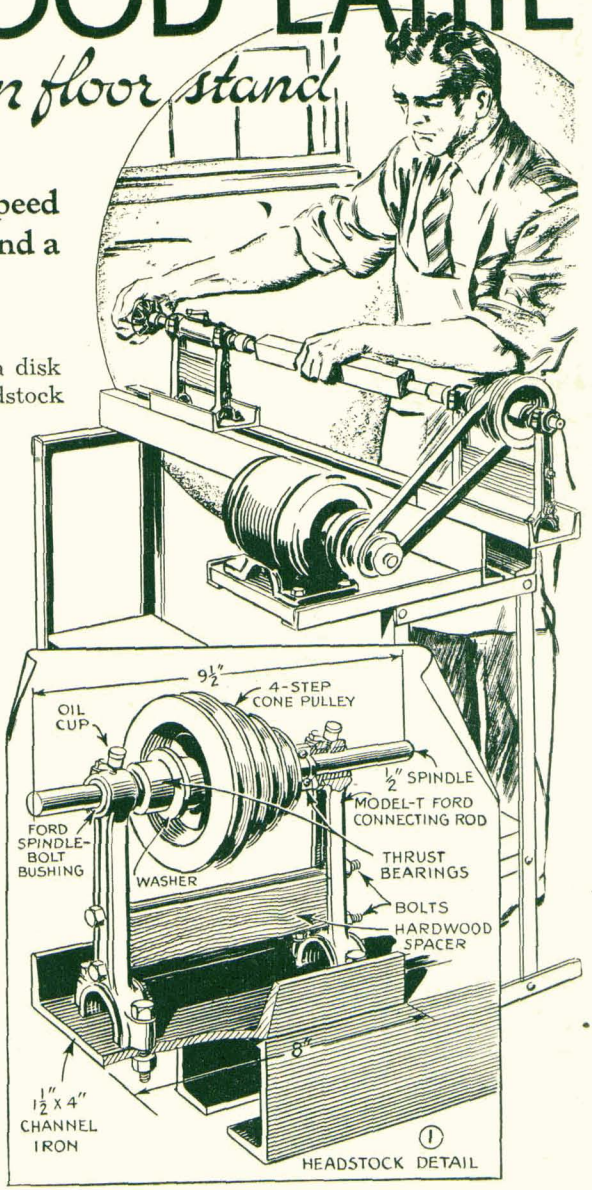


WITH this lathe you can swing a disk 12 in. in diameter on the headstock or turn down a full-length table leg between centers. The headstock spindle, Fig. 1, is supported on auto connecting rods bolted to a short length of channel which forms the base and is bolted to the bed. A hardwood spacer between the rods holds the whole thing rigid. The ½-in. spindle runs in Ford spindle-bolt bushings which are pressed into the upper ends of the connecting rods and then reamed to give the spindle a free-running fit. The spindle also carries two ball thrust bearings, one on each side of a four-step V-pulley. Polished flat washers are used to take out the end play, if any. The inner end of the spindle should project about ¾ in. to take a hollow-sleeve spur center of the type which locks in place with a headless set screw. This and the drive pulley, also the thrust bearings, can be purchased at little cost. Faceplates are also available.

The bed is simply two channels of the size given in Fig. 3. They are bolted together with spacers cut from pipe, the latter of such length as to leave the top flanges of the channels exactly 1 in. apart when the bolts are drawn tight. Now, the stand consists of two end members joined directly to the bed as in Fig. 3, and to a lower shelf as in Fig. 4. The motor shelf is assembled from three pieces of 1½-in. angle as in Fig. 3. It's a good idea to make up the stand first, then cut these pieces to suit the motor and V-belt you are to use. Fig. 2 shows a trick in fitting angle iron that should be used in building this stand, as it results in a rigid joint. After the pieces are cut to required length, file one end of the angle which meets the corner of the second angle, in this case the leg, to a contour which allows it to fit snugly. Then clamp the pieces to-

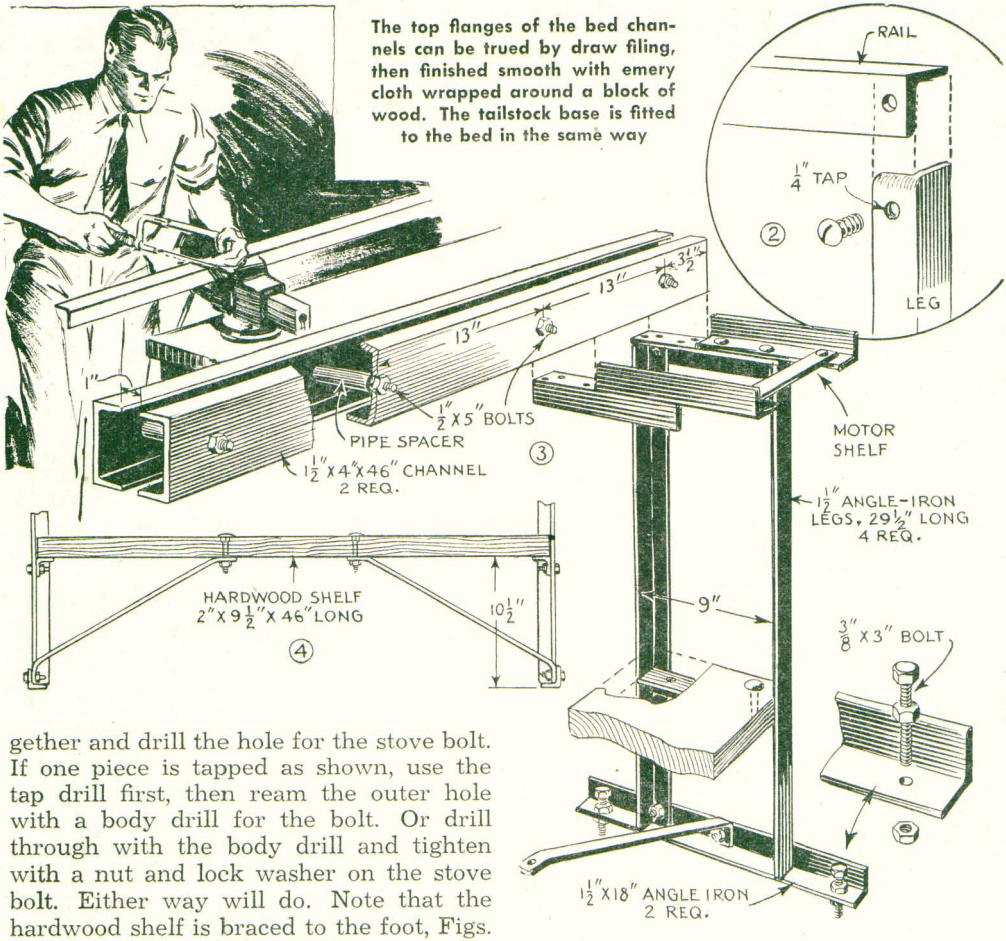


The top flanges of the bed channels can be trued by draw filing, then finished smooth with emery cloth wrapped around a block of wood. The tailstock base is fitted to the bed in the same way

gether and drill the hole for the stove bolt. If one piece is tapped as shown, use the tap drill first, then ream the outer hole with a body drill for the bolt. Or drill through with the body drill and tighten with a nut and lock washer on the stove bolt. Either way will do. Note that the hardwood shelf is braced to the foot, Figs. 3 and 4, and that the shelf rests on an angle-iron rail to which it is bolted. Foot pieces of 1½-in. angle are bolted to the ends of the legs. A machine bolt or cap-screw is put through near the ends of each foot piece and held in any position with two nuts, one on each side of one leg of the angle as shown. This gives adjustment for leveling the lathe on any floor.

Finally, the tailstock and toolrest. Fig. 6 suggests a method of making the latter. You can purchase this item ready-made also. Figs. 5 and 7 show clearly how the tailstock is made. As you will see, it is very similar to the headstock. The quill is turned out of 1-in. cold-rolled steel shafting, the ends being shouldered back the length and diameter of the upper connecting-rod bearings, leaving a center section 4½ in. long. The quill is counterbored as shown and a portion tapped to take the threaded section of the spindle. The locking device consists of a cam rolling in slots cut in the channel-iron base as in Fig. 7 and actuated by a ball handle. The cam is made by filing slots in a piece of ¾-in. shafting. These slots cause the shaft to move eccentrically, lifting the U-bolt and the plate which bind against the flanges of the bed and tighten the tailstock at any position.

A ¼-hp. motor of 1,750 r.p.m. will furnish sufficient power for ordinary work. By using matched 4-step cone pulleys on motor and headstock you will not have to shift the motor to change the spindle speed. By making up hinged motor rails out of strips of hardwood or ¼-in. flat iron it will be much easier to shift the belt when changing speeds. Hinged motor rails can also be purchased ready-made.

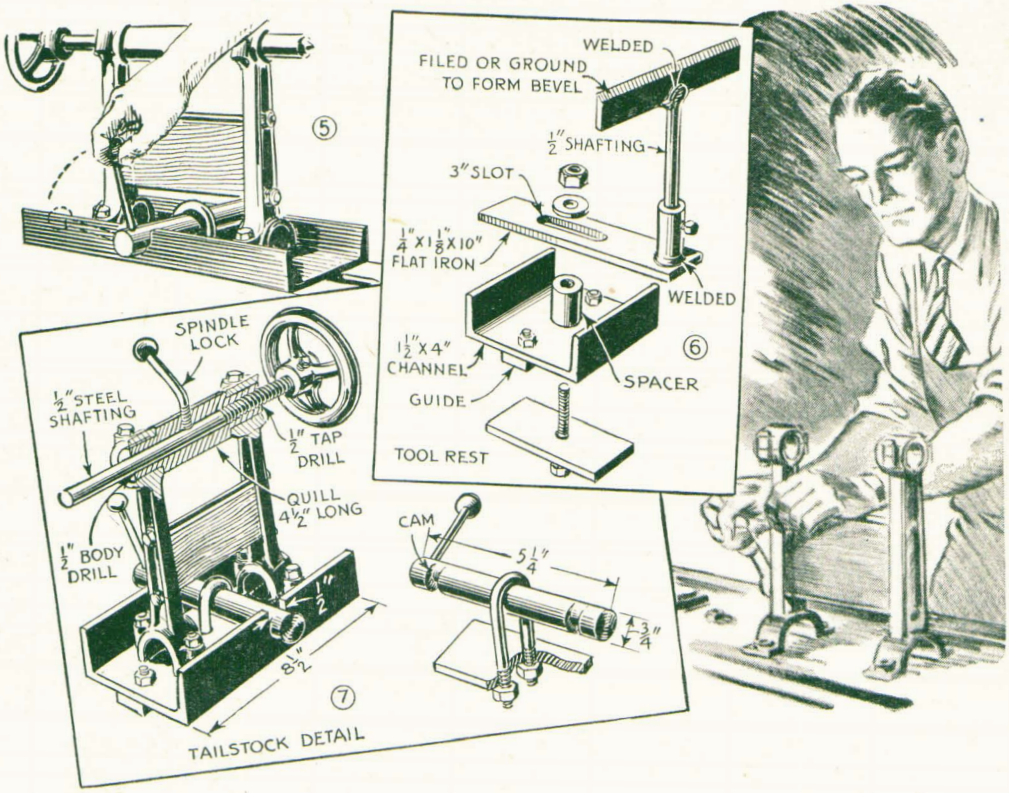


# This Lathe Sanding Table Fits Toolpost Holder

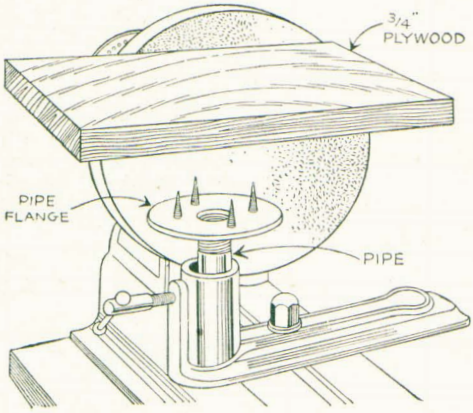


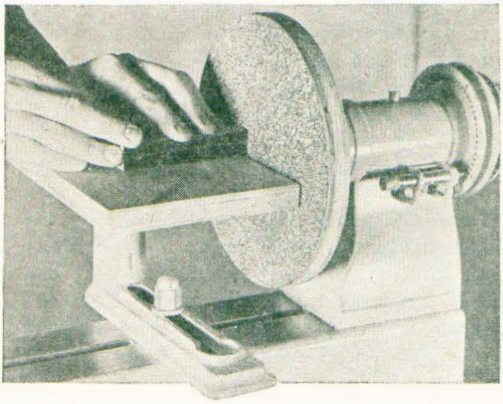

When squaring up small pieces of stock on a lathe sanding disk it is very often an advantage to have a table that can be adjusted easily and quickly to the best working height in relation to the disk. Made from a piece of plywood of a convenient size a short length of pipe and a flange, you have a table that is adjustable both vertically and horizontally. The toolrest base forms the holder, and the sanding table is held in the desired position by simply running up the clamp screw.